1000 GALLON SEPTIC TANK WITH EFFLUENT FILTER

REGISTERED PROFESSIONAL ENGINEER 10588PE OREGON MAY 6, 1980 V. ROBERT WELLS

RENEWAL 06-30-02

EE MARKUPS
11-9-2021

TANK CAPACITY	
RESERVE CAPACITY	180 GAL
LIQUID CAPACITY	1072 GAL
TOTAL VOLUME	1252 GAL
TANK:	21.2 GAL/PER INCH

GENERAL NOTES:

1. THE SEPTIC TANK AS SHOWN COMPLIES WITH THE REQUIREMENTS OF THE STATE OF OREGON, DEPARTMENT OF ENVIRONMENTAL QUALITY, "ON-SITE SEWAGE DISPOSAL RULES" DATED APRIL 1, 1995.

2. INLET AND OUTLET SEAL FOR EXTERIOR PIPING SHALL BE 4" SV4 NEOPRENE COLLAR CAST INTO CONCRETE CONFORMING TO ASTM C-564. BY TYLER.

3. CONCRETE SHALL ATTAIN A MINIMUM 7- DAY COMPRESSIVE STRENGTH OF 3000 P.S.I. AND A 28- DAY COMPRESSIVE STRENGTH OF ~~5000 P.S.I.~~ 6000 P.S.I. MINIMUM CEMENT CONTENT SHALL BE 7 SACKS PER CU. YD. MAXIMUM SLUMP 3 INCHES.

4. REINFORCING BARS SHALL CONFORM TO ASTM A615 ~~GRADE 40 (fy = 40,000 P.S.I.)~~ GRADE 60 (fy = 60,000 P.S.I.). WELDED WIRE FABRIC (W.W.M.) SHALL BE ~~ASTM A185~~ ASTM A1064.

5. WALL REINFORCING SHALL BE AS NOTED ON PLANS. TOP AND BOTTOM REINFORCING SHALL BE AS INDICATED ON THE DRAWINGS. ADDITIONAL REINFORCING TO BE PROVIDED FOR TEMPERATURE/ SHRINKAGE CRACKING AND IMPACT/ HANDLING LOADS BY ADDING 1.6 LB. PER CU. YD. OF "FORTA FIBRE" SYNTHETIC FIBER REINFORCING.

6. TANKS SHALL BE EQUIPED WITH WATER TIGHT RISERS TO BRING ACCESS TO OR ABOVE FINISHED GRADE. 6" RISER INCREMENTS FROM 12" MINIMUM TO 36" MAXIMUM.

7. GROUT SOLID ALL UNUSED KNOCKOUTS AND SEAL ALL TANK PENETRATIONS WITH CONSPEC ALL-PATCH CONCRETE PATCHING MORTAR BY CONSPEC MANUFACTURING INC.

8. SEAL RISERS TO TANK TOP, RISER CAPS TO RISERS AND TANK SECTIONS AT FIELD JOINTS WITH 3/4" x 3/4" CONTINUOUS BUTYL CAULK. CON-SEAL CS101 OR EQUAL.

9. TEST TANKS FOR WATERTIGHTNESS. AFTER TANKS ARE INSTALLED PLUG ALL INLETS AND OUTLETS AND TEST TANKS BY FILLING EACH TANK TO A MINIMUM OF TWO (2) INCHES ABOVE THE POINT OF THE RISER CONNECTION TO THE TANK. THERE SHALL BE NO MORE THAN ONE (1) GALLON OF LEAKAGE IN A 24 HOUR PERIOD.

10. IN AREAS OF HIGH GROUND WATER THAT WILL CAUSE HYDROSTATIC UPLIFT OF THE TANK CONSTRUCT HYDROSTATIC UPLIFT HOLD DOWN AROUND TANK. SEE DETAIL.

1000 GAL SEPTIC TANK w/ EFFLUENT FILTER COVER SHEET

MICHAELS' PRECAST CONCRETE
35175 S.E. HYWY 211 BORING, OREGON
(503) 668-4073

DATE	11/01/01
PROJECT	01-235
DRAWN	RW
CHECKED	
SHEET NUMBER	1

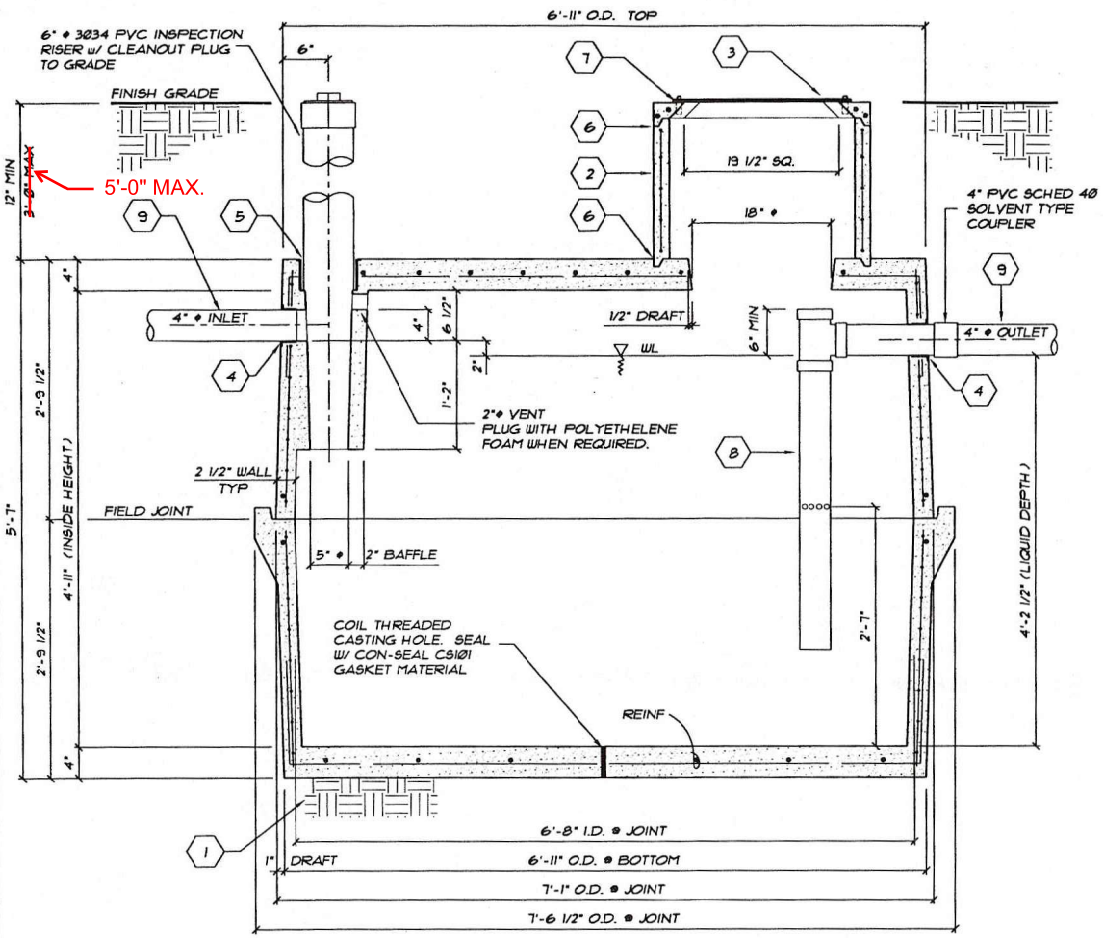

TANK SECTION

3/4" = 1'-0"

EE MARKUPS
11-9-2021

REGISTERED PROFESSIONAL ENGINEER 10588PE OREGON MAY 6, 1980 V. ROBERT WELLS

RENEWAL 06-30-02

1. TANK TO BE PLACED ON LEVEL NATIVE MATERIAL WITH NO PROTRUDING ROCKS. OPTIONAL 2" SAND LEVELING COURSE OR 4" OF 3/4"-0 COMPACTED ROCK LEVELING CORSE.
2. REINFORCED CONCRETE RISER AND LID CAP. 6" RISER INCREMENTS FROM 12" MIN TO 36" MAX.
3. 1/4" STEEL LID WITH METAL PRIMER. SEE DETAIL. ATTATCH TO CONCRETE RISER CAP WITH 4- 1/4" ϕ S.S. BOLTS IN THREADED PLASTIC CONCRETE INSERTS BY CONNECTING SYSTEMS, INC.
4. 4" TYLER SV4 NEOPRENE (ASTM C-564) COLLAR CAST INTO CONCRETE.
5. 6" TYLER SV6 NEOPRENE (ASTM C-564) COLLAR CAST INTO CONCRETE.
6. SEAL RISER TO TANK AND RISER CAP TO RISER WITH 3/4" x 3/4" CONTINUOUS BUTYL CAULK AROUND EACH. CON-SEAL CS101 OR EQUAL.
7. LID SEAL. 1/2" WIDE x 5/16" THICK SPONGE WEATHERSTRIP WITH ADHESIVE BY AUVECO. APPLY AROUND PERIMETER OF STEEL LID.
8. ORENCO 4" DIAM x 44" LONG PVC SCHEDULE 40 BIOTUBE EFFLUENT FILTER. BY ORENCO SYSTEMS INC OR APPROVED ALTERNATE.
9. USE 4" PVC SCHEDULE 40 INLET AND OUTLET PIPE WITHIN TANK EXCAVATION LIMITS.

1000 GAL SEPTIC TANK W/ EFFLUENT FILTER SECTIONS

MICHAELS' PRECAST CONCRETE
35175 S.E. HYWY 211
BORING, OREGON
(503) 668-4073

DATE	11/01/01
PROJECT	01-235
DRAWN	RW
CHECKED	
SHEET NUMBER	2

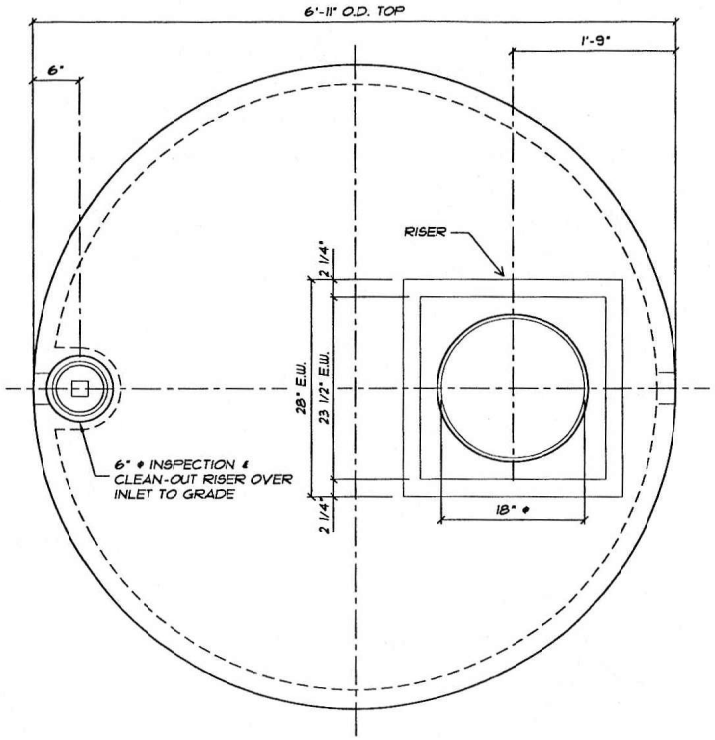

COVER PLAN

3/4" = 1'-0"

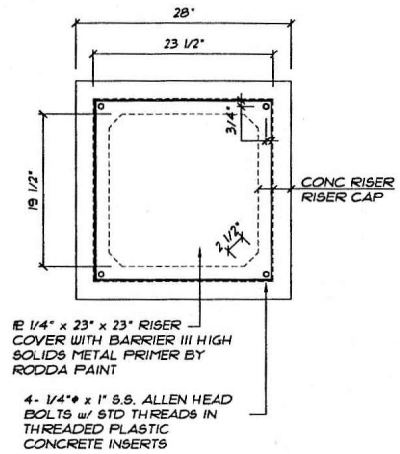

RISER LID PLAN

3/4" = 1'-0"

REGISTERED PROFESSIONAL ENGINEER 10588PE OREGON MAY 6, 1980 V. ROBERT WELLS

RENEWAL 06-30-02

1000 GAL SEPTIC TANK W/ EFFLUENT FILTER COVER PLAN

MICHAELS'
PRECAST CONCRETE
35175 S.E. HYWY 211
(503) 668-4073
BORING, OREGON

DATE	11/01/01
PROJECT	01-235
DRAWN	RW
CHECKED	
SHEET NUMBER	3

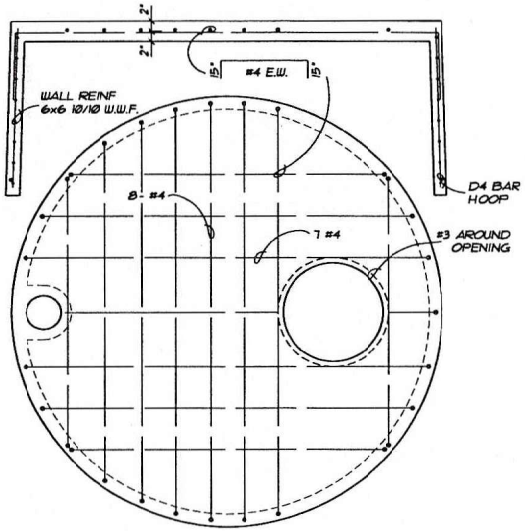

COVER REINFORCING

NTS

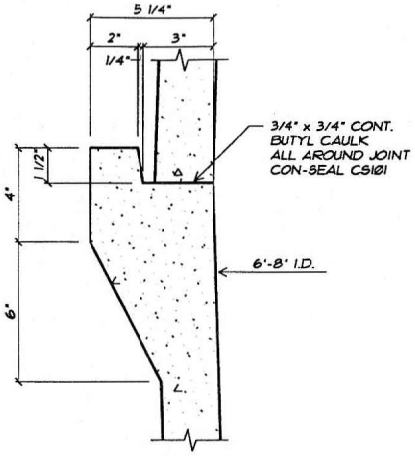

FIELD JOINT DETAIL

NTS

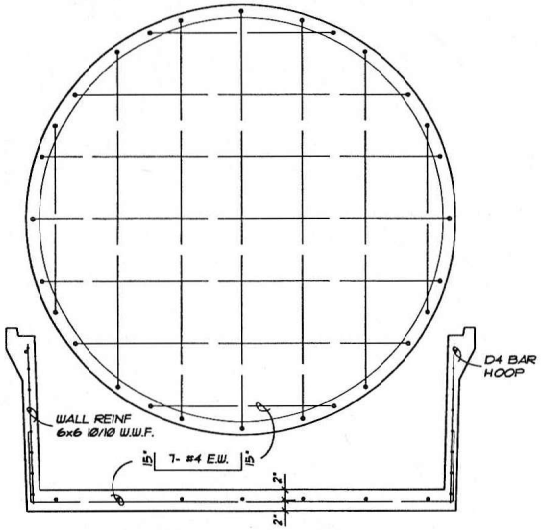

BOTTOM REINFORCING

NTS

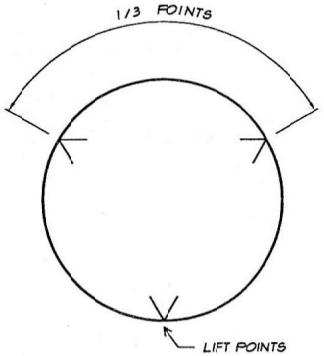

TANK LIFT POINTS

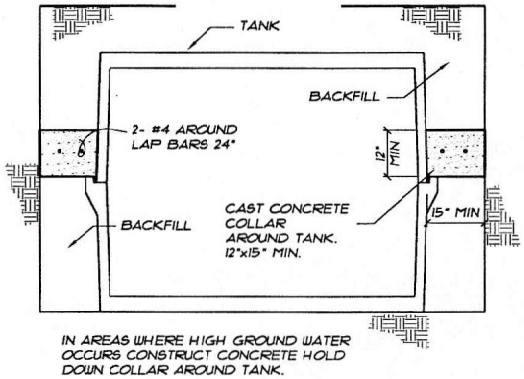

IN AREAS WHERE HIGH GROUND WATER OCCURS CONSTRUCT CONCRETE HOLD DOWN COLLAR AROUND TANK.

HYDROSTATIC UPLIFT HOLD DOWN

NTS

REGISTERED PROFESSIONAL ENGINEER
10688PE
OREGON
MAY 6, 1980
V. ROBERT WELLS

RENEWAL 06-30-02

1000 GAL SEPTIC TANK W/ EFFLUENT FILTER DETAILS

MICHAELS'
PRECAST CONCRETE
35175 S.E. HYWY 211
BORING, OREGON
(503) 668-4073

DATE	11/01/01
PROJECT	01-235
DRAWN	RW
CHECKED	
SHEET NUMBER	4